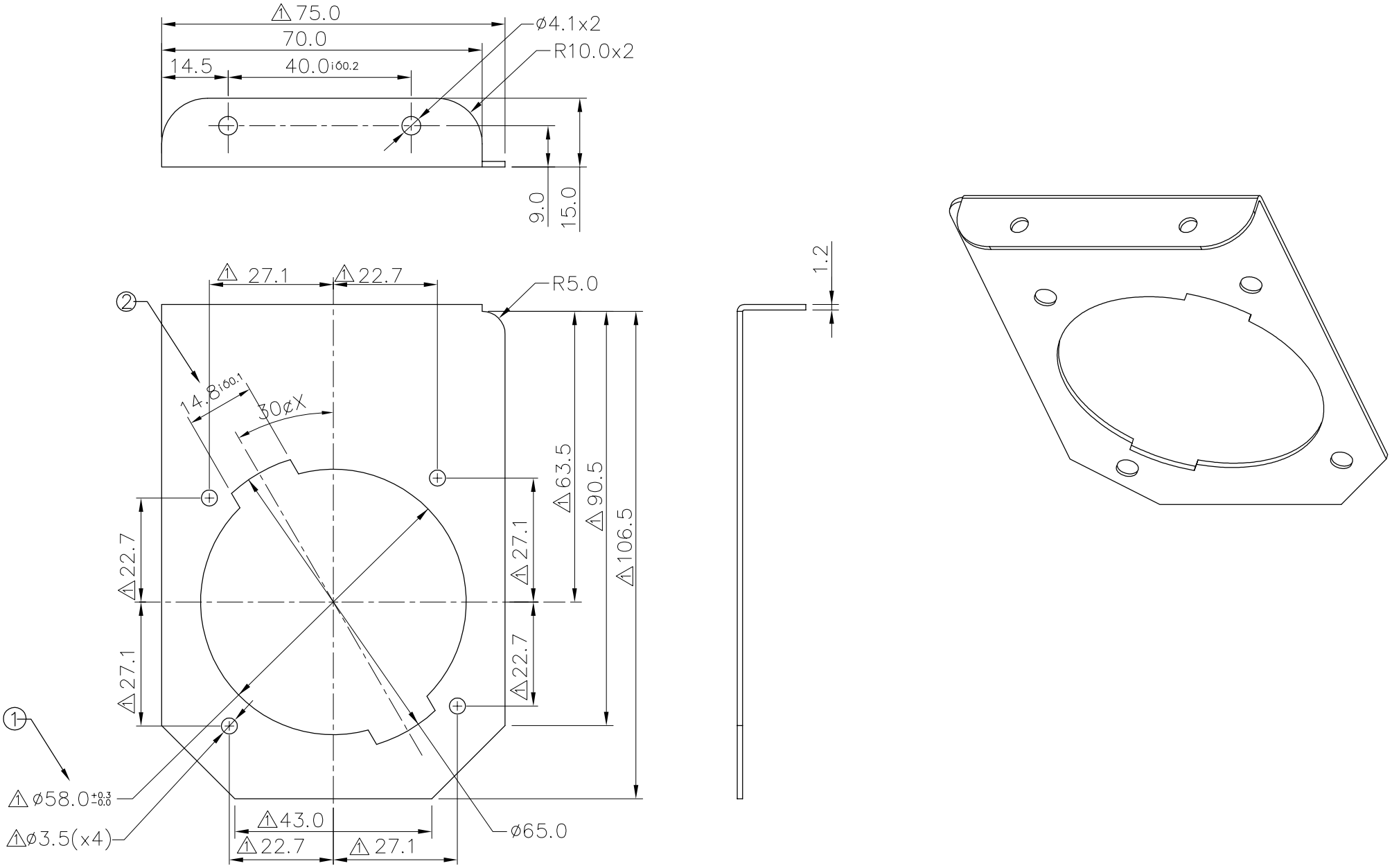
75.0
70.0
14.5
40.0 ±0.2
ø4.1x2
R10.0x2
9.0
15.0
27.1
22.7
R5.0
14.8 ±0.1
30ø X
63.5
90.5
106.5
27.1
22.7
22.7
27.1
ø58.0 +0.3 -0.0
ø3.5(x4)
43.0
22.7
27.1
ø65.0
1.2